DRC
PZ25-12000009
12/17/2025

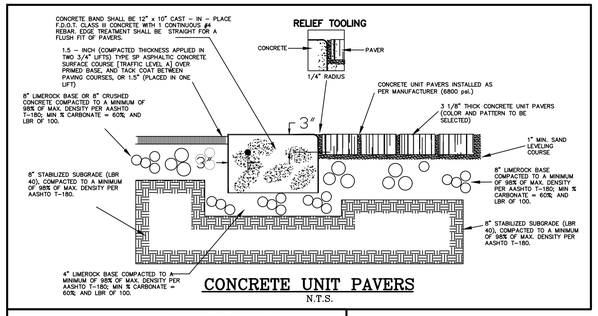

CONCRETE UNIT PAVERS
N.T.S.

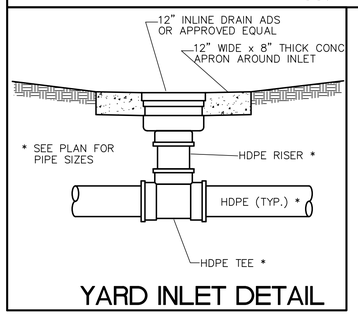

YARD INLET DETAIL

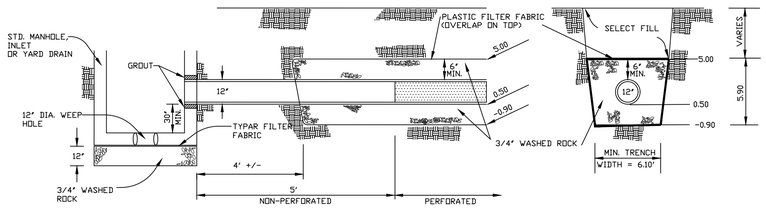

LONGITUDINAL VIEW

CROSS - SECTION

NOTES:

1. THE CONTRACTOR SHALL TAKE NECESSARY PRECAUTIONS TO PREVENT CONTAMINATION OF THE TRENCH BY SAND, SILT, OR OTHER MATERIAL.
2. THE CONTRACTOR SHALL INSTALL
   A. PERFORATED RCP IN ACCORDANCE WITH F.DO.T. REQUIREMENTS.
   B. CORRUGATED ALUMINUM IN ACCORDANCE WITH F.DO.T. REQUIREMENTS.
3. NO PIPE PERFORATIONS FOR THE FIRST 5 FEET FROM THE INLET OR MANHOLE.
4. PIPE PERFORATIONS SHALL BE PER FDOT REQUIREMENTS
5. SEE DETAILS OF MANHOLE AND/OR INLET FOR CONSTRUCTION DETAILS OF SAME.
6. PLASTIC FILTER FABRIC SHALL CONFORM TO D.O.T. SECTION 985 OR APPROVED EQUAL.
7. PRIOR TO BACKFILLING ANY DRAINAGE STRUCTURES, THE CITY ENGINEERING DEPARTMENT SHALL BE GIVEN 24 HOURS NOTICE IN ORDER TO SCHEDULE AN INSPECTION OF THE FACILITY.

FRENCH DRAIN DETAIL

N.T.S.

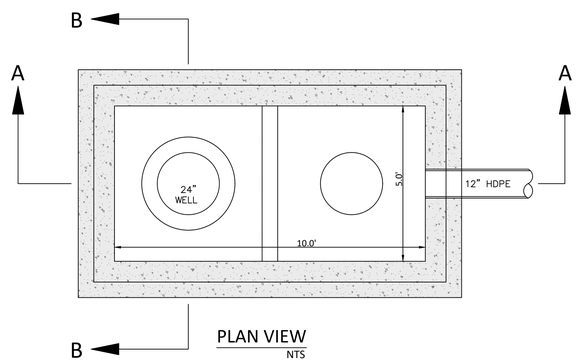

PLAN VIEW
NTS

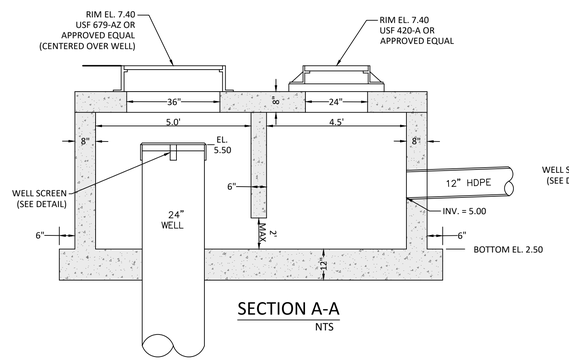

SECTION A-A
NTS

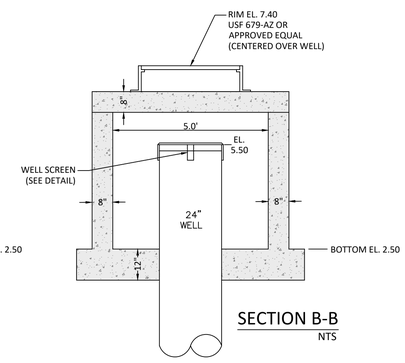

SECTION B-B
NTS

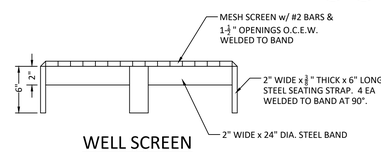

WELL SCREEN
NTS

NOTES:
1. CONCRETE SHALL HAVE A COMPRESSIVE STRENGTH OF 4,000 PSI @ 28 DAYS.
2. STEEL REINFORCING SHALL BE GRADE-60 ALL THROUGHOUT. REINFORCING SCHEDULE SHALL BE PER FDOT STANDARD INDEX NO.S 200, & 201.
3. WELL CHAMBER MANHOLE SHALL BE DIRECTLY OVER WELL.
4. THE WELL SHALL BE DRILLED TO A DEPTH WHERE THE TESTED DISCHARGE IS A MINIMUM OF 300 GPM PER FOOT OF HEAD.

WELL & RETENTION CHAMBER DETAIL

REVISIONS	DATE	BY
REV PER CITY COMMENTS	09/08/25	JJB
REV PER CITY COMMENTS	07/25/25	JJB

FILE NAME: 11181ENG.dwg

CAULFIELD & WHEELER, INC.
CIVIL ENGINEERING
LANDSCAPE ARCHITECTURE - SURVEYING
7900 GLADES ROAD - SUITE 100
BOCA RATON, FLORIDA 33434
PHONE (561)-392-1991 / FAX (561)-750-1452

RIVERSIDE TOWNHOMES
117 S RIVERSIDE DRIVE
PAVING, GRADING, & DRAINAGE DETAILS
POMPANO BEACH, FLORIDA

DATE	03/18/25
DRAWN BY	JJB
F.B./ PG.	----
SCALE	N/A

MATTHEW V. KAHN
PROFESSIONAL ENGINEER
LICENSE NO. 82227
STATE OF FLORIDA
- FOR THE FIRM -
DATE

JOB # 11181
SHT.NO.
PD-5
OF 13 SHEETS

Drawing: P:\11181-00-00-00\drawings\eng\details\11181DETAILS-PD2_POMPANO.dwg\PD2-DETAILS_09-PD-5